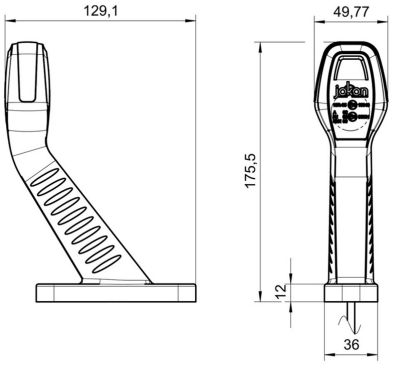

OEI no: OEI542003254

OE no: 12.0020.600

End-outline marker light

Marker light

Product group	Side lamps
Source of light	LED
Voltage	9-32V
Number of functions	1

Manufacturer: Jokon

Approval: E2-08101

Model: SPL2020

Montage side: Right

Material: PMMA/ABS

IP Rating: IP67

Shape: Other
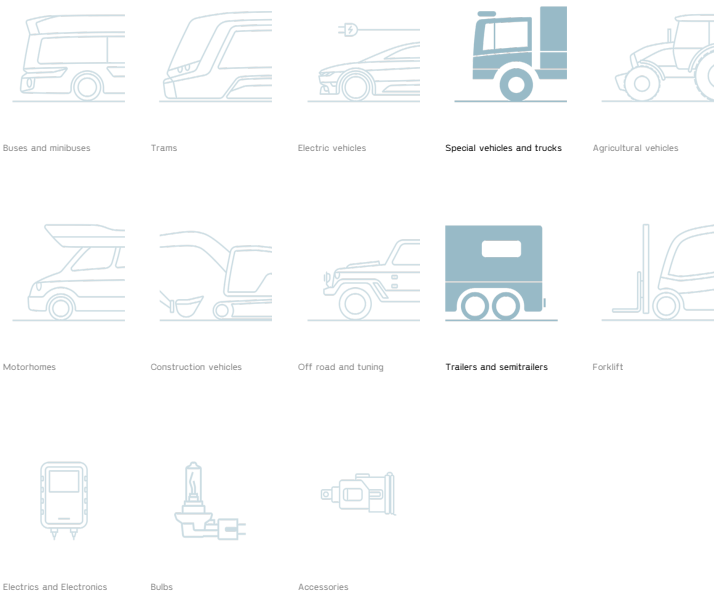
APPLICATION