OEI no: OEI261001565

OE no: 10.2043.111

Rear lamp

Stop light, position light, indicator, fog light, reversing light, number plate light, reflex

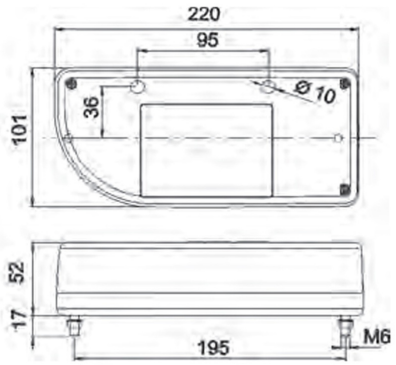

Product group	Rear lamps
Source of light	Bulb
Voltage	12V
Size (mm)	200x101
Number of functions	7

Manufacturer: Jokon

Shape: Rectangular

Type of bulb: PY21;P21/5W 2xP21W;C5W

Approval: E9-1423

Model: BBSKWNR821

Montage side: Left

Material: PMMA/PP

Connection: Connectors
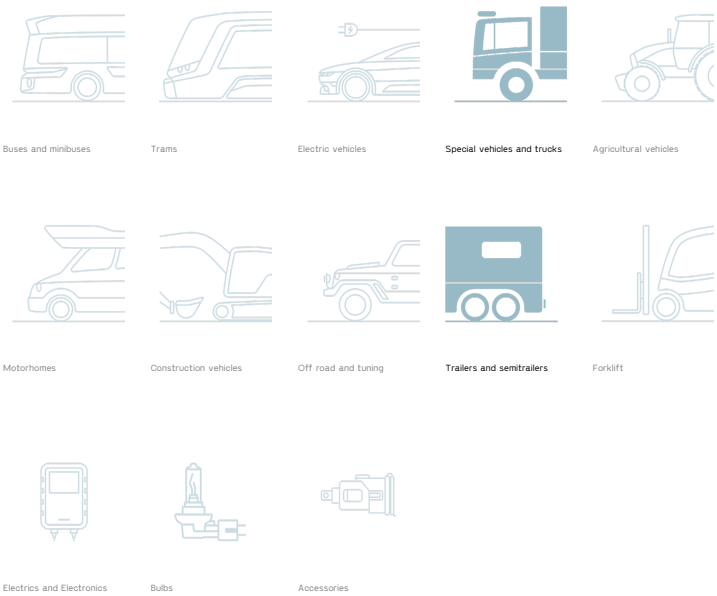
APPLICATION